Sword-billed hummingbird

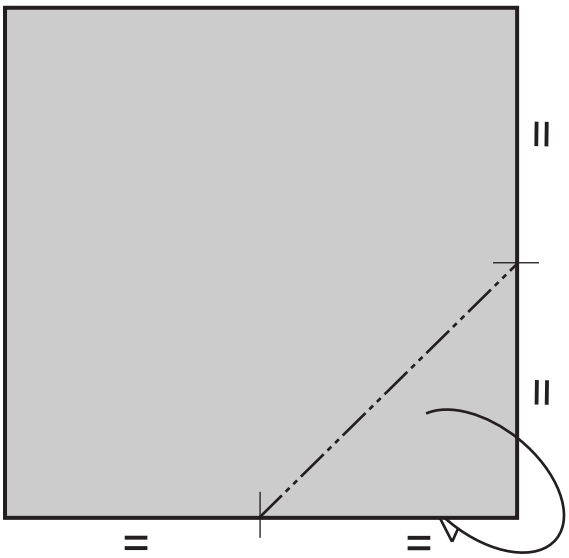

1. Begin with a square, colored side up. The model makes no use of the two-coloring of the paper, though. Tuck one corner under.

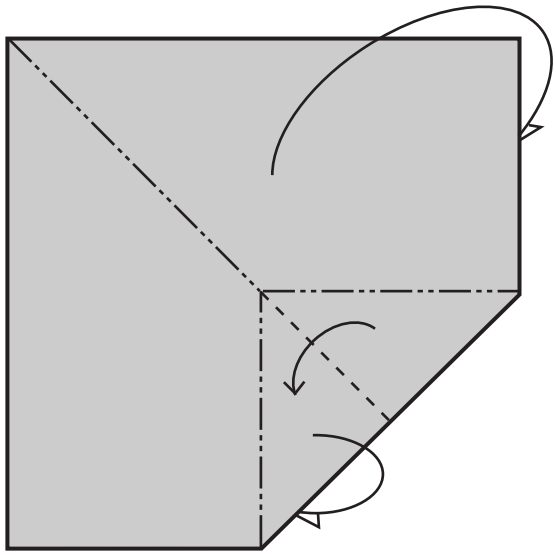

2. Fold along the diagonal and inside-reverse-fold the right corner.

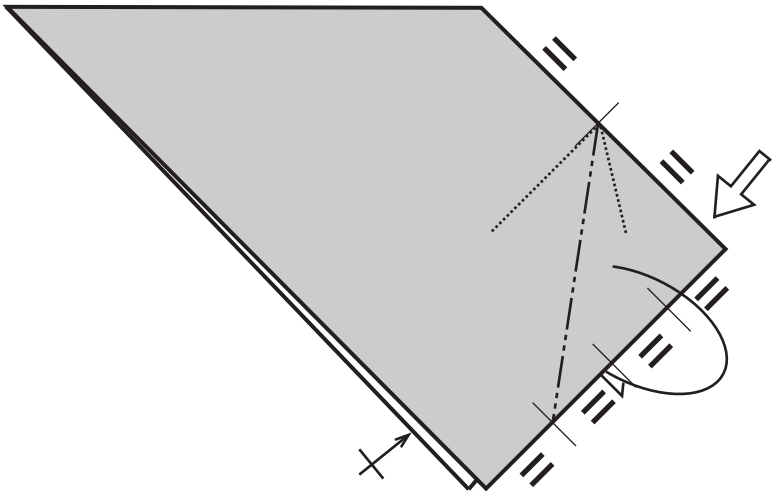

3. Inside-reverse-fold the right flap. Note the crease does not go down to the lower corner. Repeat behind.

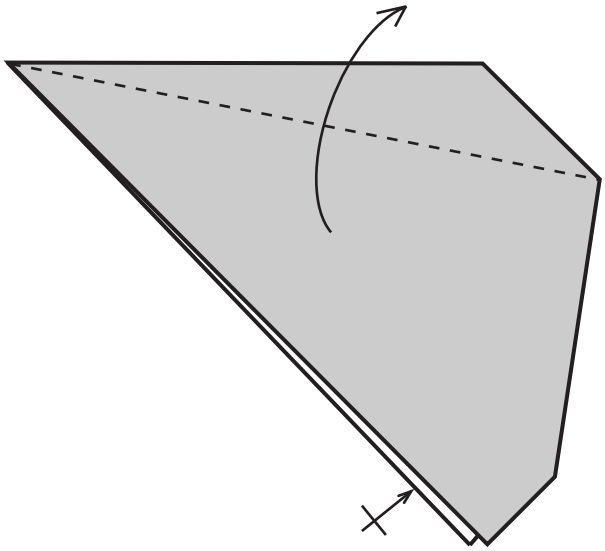

4. Valley-fold. Repeat behind.

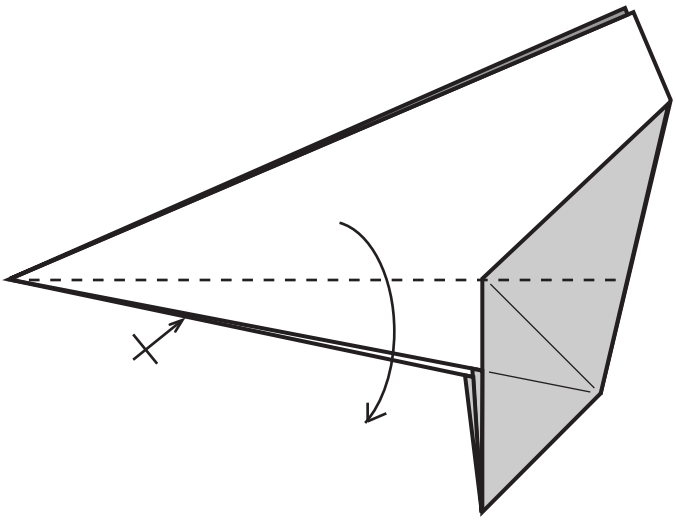

5. Valley-fold. Align crease with edge lying under. Repeat behind.

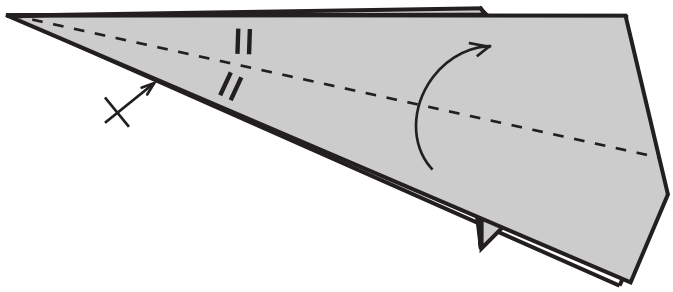

6. Valley-fold along bisector angle. Repeat behind.

© Copyright 2008 Joaquín M López Muñoz.

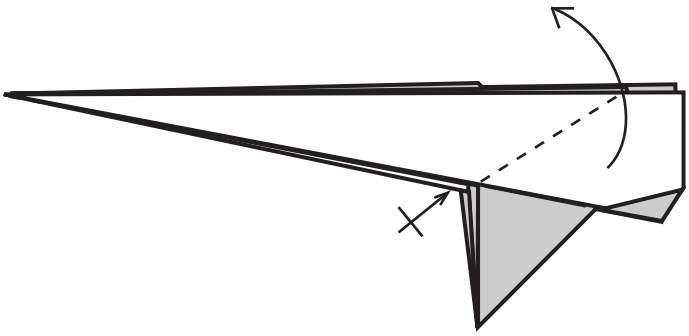

7. Valley-fold. The upper end of the crease goes as far left as possible. Repeat behind.

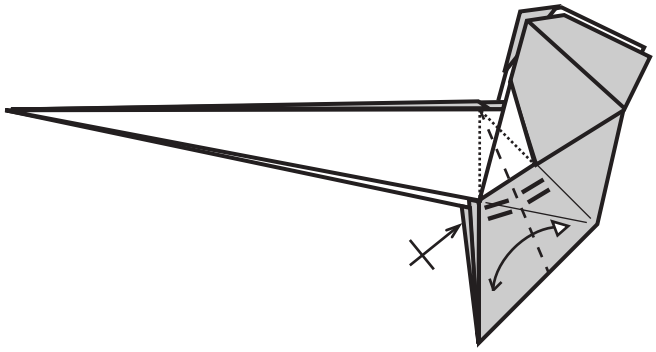

8. Fold and unfold along bisector angle. Repeat behind.

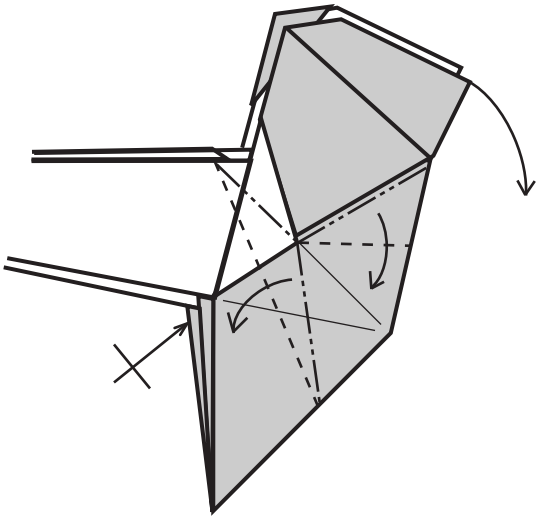

9. Make a rabbit ear fold using previously marked crease. Repeat behind.

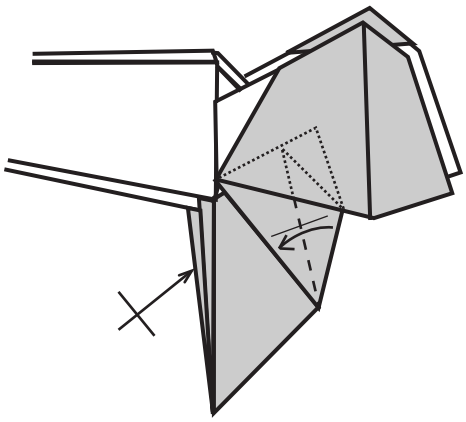

10. Narrow the flap under the wing. Repeat behind.

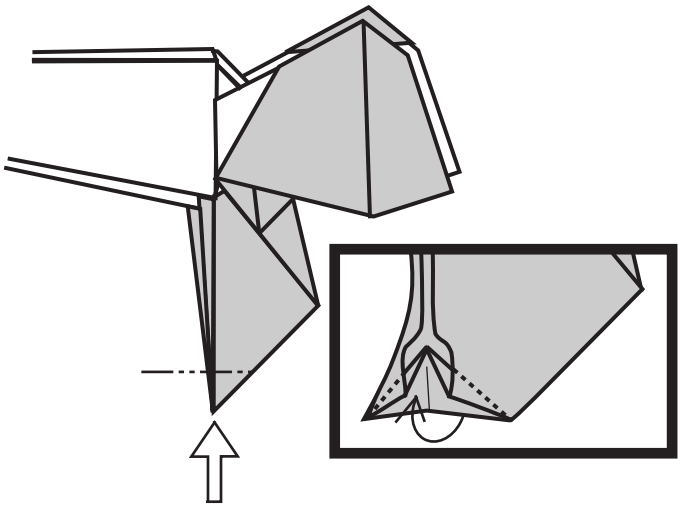

11. Inside-reverse the lower tip, tucking the paper under the outside layers. The exact position of the crease is not defined.

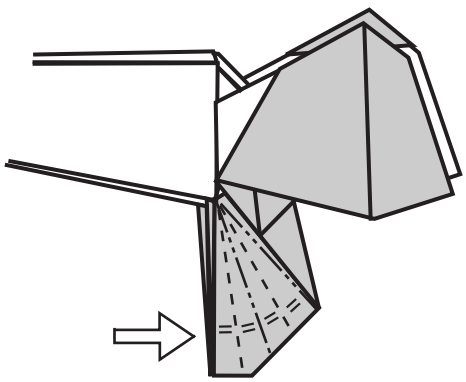

12. Fan-fold the tail.

© Copyright 2008 Joaquín M López Muñoz.

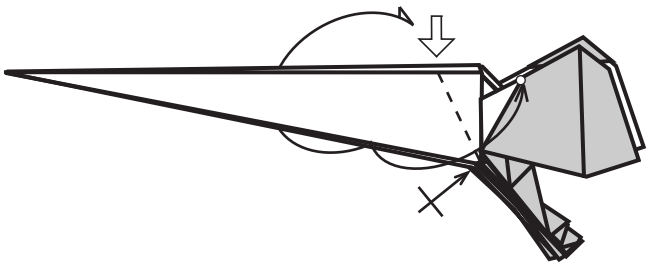

13. Outside-reverse-fold the left flap, making the edge coincide with the dot-designated point.

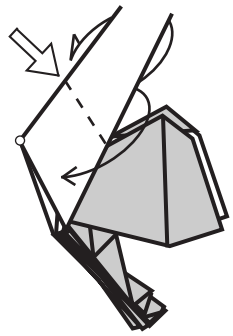

14. Outside-reverse-fold again. The exact position of the fold is undefined, make sure the dot-designated corner is hidden after the fold.

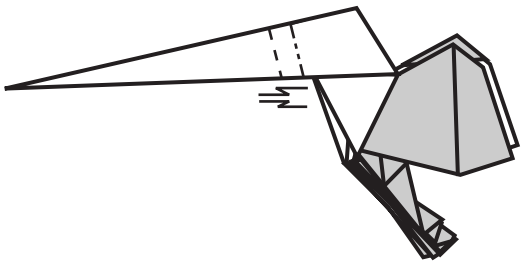

15. Crimp the beak in at some approximate position.

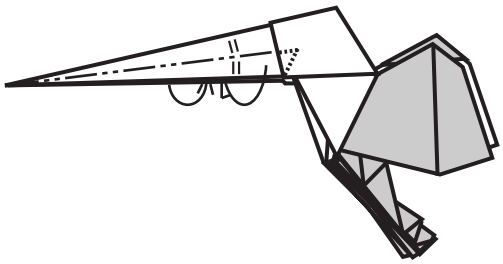

16. Narrow the beak by mountain-folding the flaps.

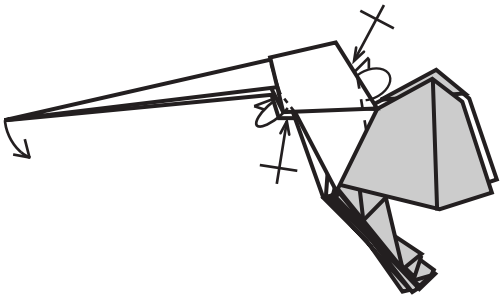

17. Tilt the beak slightly down. Round some edges in the head.

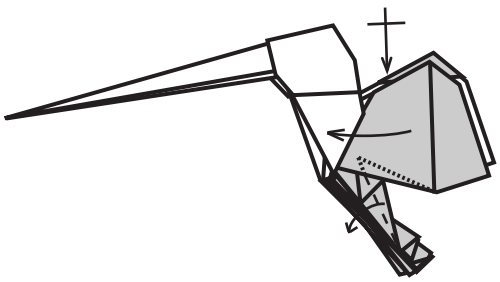

18. Narrow the flaps behind the wings. Do not fold flat: let the folds make the wings tilt forward so that they form a 90º degree angle with the body.

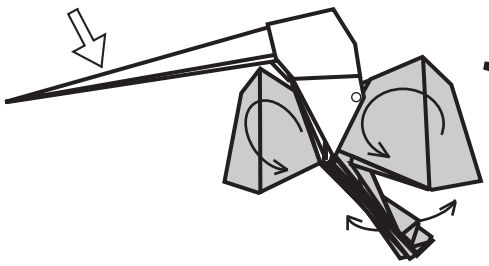

19. Curl the wings. Use the dot-designated flap to secure the wings in place. Curve the beak up, spread the tail, round the model as appropriate.

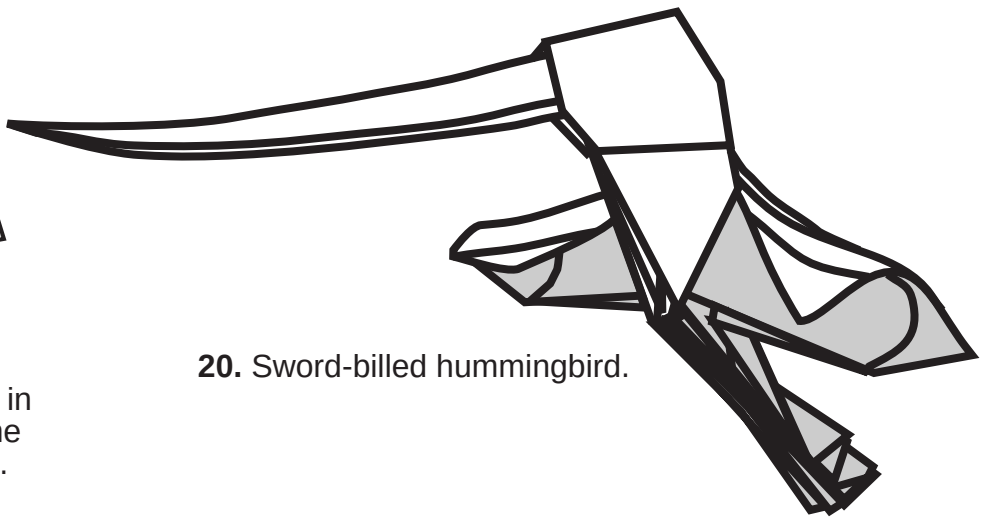

20. Sword-billed hummingbird.

© Copyright 2008 Joaquín M López Muñoz.